1883860
Wittingham Bar Table

Parts and Hardware List

A.	Top Assembly	1 pc
B.	Center Panel	1 pc
C.	Leg w/6 holes	2 pcs
D.	Leg w/4 holes	2 pcs
E.	Front Stretcher w/Small Cutout	3 pcs
F.	Back Stretcher w/Large Cutout	3 pcs
G.	Bottom Panel	1 pc
H.	Adjustable Shelf	1 pc
I.	Glass Holder	1 pc
J.	Long Allen Head Bolts	8 pcs
K.	Short Allen Head Bolts	2 pcs
L.	Flat Washer	10 pcs
M.	Lock Washer	10 pcs
N.	Allen Head Wrench	1 pc
O.	Long Phillips Head Wood Screw	4 pcs
P.	Short Phillips Head Wood Screw	6 pcs
Q.	Phillips Head Screwdriver	1 pc
R.	Adjustable Shelf Support Pin	4 pcs
S.	Connecting Bolt	2 pcs
T.	Eccentric Cam	2 pcs
U.	Plastic Cap	2 pcs

* Please make sure that you have all the parts indicated before you begin assembly of this item.
* Use the hardware illustration to determine correct piece and size.
* This item should be assembled on a soft surface to prevent scratching the finish during assembly.
* This item may require periodic tightening.

1883860
Wittingham Bar Table

Hardware Illustrations

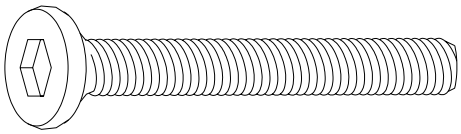

J. Long Allen Head Bolt

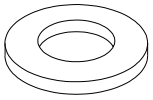

L. Flat Washer

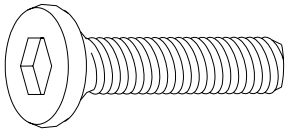

K. Short Allen Head Bolt

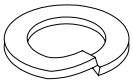

M. Lock Washer

O. Long Phillips Head Wood Screw

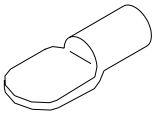

R. Adjustable Shelf Support Pin

P. Short Phillips Head Wood Screw

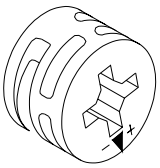

T. Eccentric Cam

S. Connecting Bolt

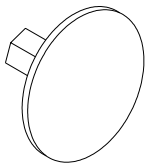

U. Plastic Cap

1883860
Wittingham Bar Table

Assemble Glass Holder and Center Panel

Parts required

A.	Top Assembly	1 pc	M.	Lock Washer	6 pcs
B.	Center Panel	1 pc	N.	Allen Head Wrench	1 pc
I.	Glass Holder	1 pc	P.	Short Phillips Head Wood Screw	6 pcs
J.	Long Allen Head Bolts	4 pcs	Q.	Phillips Head Screwdriver	1 pc
K.	Short Allen Head Bolts	2 pcs	D.	Leg w/4 holes	2 pcs
L.	Flat Washer	6 pcs			

1. **Attach the Glass Holder (I)** Place Top Assembly (A) upside down on the floor and take out the drawers by removing the wood dowels on the drawer slides. Align the pre-drilled holes in the Glass Holder (I) with the pre-drilled holes in the underside of bottom of drawer on Top Assembly (A). Secure with Short Phillips Head Wood Screw (P) using Phillips Head Screwdriver (Q). See Illustration #1.
2. **Attach the Center Panel (B)** Insert the Center Panel (B) into the slot of Top Assembly (A). Make sure the pre-threaded holes in the Center Panel (B) align with the pre-drilled holes in the slot of Top Assembly (A). Secure with Short Allen Head Bolts (K), Lock Washers (M) and Flat Washers (L) using the Allen Head Wrench (N). See Illustration #1.
3. **Attach the Legs w/4 holes (D)** Align the pre-drilled holes on the corner block with the pre-threaded holes on the Leg (D). Make sure the pre-drilled holes in the center of leg are facing the Center Panel (B). Secure the Leg (D) with Long Allen Head Bolts (J), Lock Washers (M) and Flat Washers (L) using the Allen Head Wrench (N). See Illustration # 1.

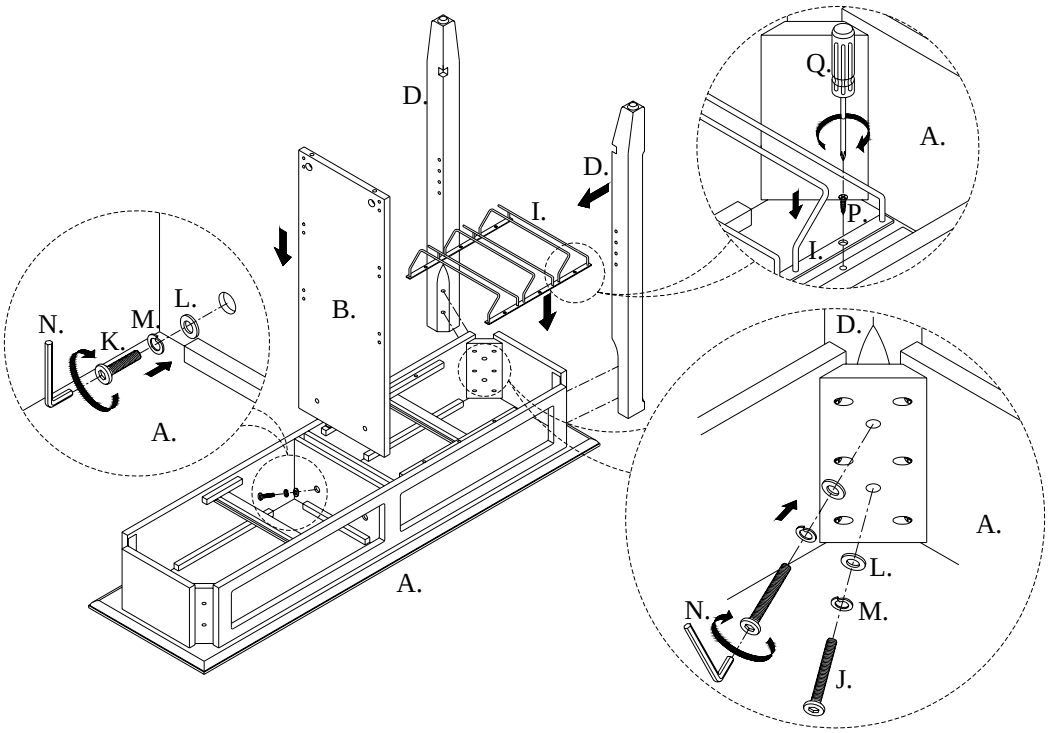

Illustration # 1

1883860
Wittingham Bar Table

Assemble Stretcher, Leg and Bottom Panel

Parts required

C.	Leg w/6 holes	2 pcs	M.	Lock Washer	4 pcs
E.	Front Stretcher w/Small Cutout	3 pcs	N.	Allen Head Wrench	1 pc
F.	Back Stretcher w/Large Cutout	3 pcs	S.	Connecting Bolt	2 pcs
G.	Bottom Panel	1 pc	T.	Eccentric Cam	2 pcs
J.	Long Allen Head Bolt	4 pcs	U.	Plastic Cap	2 pcs
L.	Flat Washer	4 pcs	Q.	Phillips Head Screwdriver	1 pc
O.	Long Phillips Head Wood Screw	4 pcs			

4. **Attach the Stretchers (E&F)** Insert the exposed dowels of the Front Stretchers (E) & Back Stretchers (F) into the pre-drilled holes of Center Panel (B). Make sure the cutouts are facing the bottom of Top Assembly (A). See Illustration #2
5. **Attach the Connecting Bolts (S)** Screw Connecting Bolts (S) into the pre-threaded holes in the Bottom Panel (G).
6. **Attach the Eccentric Cams (T)** Insert the Eccentric Cams (T) into the pre-drilled holes on the Center Panel (B). Make sure the arrow on the Cam points toward the pre-drilled hole in the edge of the Center Panel (B).
7. **Attach Bottom Panel (G) to Center Panel (B)** Align the pre-drilled holes in the edge of Center Panel (B) over the Connecting Bolts (S) attached to the Bottom Panel (G). Secure Center Panel (B) to the Bottom Panel (G) by turning the Eccentric Cam (T) in a clockwise direction with Allen Head Wrench (N). Cover the Eccentric Cams (T) with the Plastic Caps (U). See Illustration #2
8. **Attach the Legs w/6 holes(C)** Position the Leg w/6 holes to the corner block. Align and insert the exposed dowels of the Front Stretcher (E) and Back Stretcher (F) into the pre-drilled holes of the Leg w/6 holes (C). Make sure the pre-drilled holes on the corner block align with the pre-threaded holes on the Legs (C). Secure the Leg (C) with Long Allen Head Bolts (J), Lock Washers (M) and Flat Washers (L) using Allen Head Wrench (N). See Illustration #2.
9. **Attach the Bottom Panel(G)** Align the pre-drilled holes in the underside of the Bottom Panel (G) with the pre-drilled holes in the Legs (C&D). Secure in place with the Long Phillips Head Wood Screws (O) using the Phillips Head Screwdriver (Q). See Illustration #2.
10. Place the 2 drawers into the Top Assembly (A) and insert the wood dowels, which were removed in Step 1, into the pre-drilled holes on the drawer slides as a drawer stopper. See Illustration # 2.

BOMBAY

1883860
Wittingham Bar Table

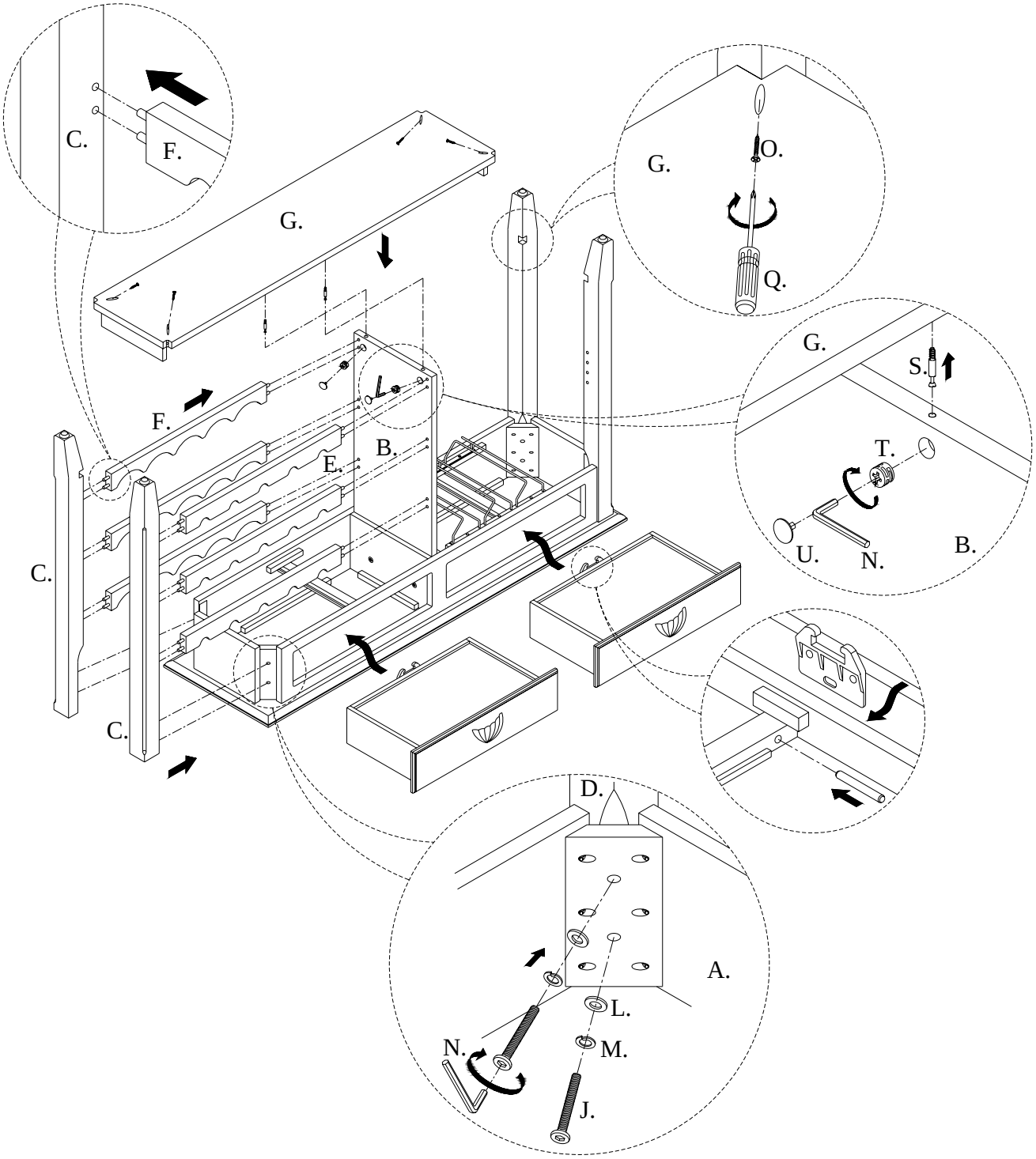

Illustration # 2

1883860
Wittingham Bar Table

Attach the Adjustable Shelf

Parts required

H.	Adjustable Shelf	1 pc	R.	Adjustable Shelf Support Pin	4 pcs

10. **Attach the Adjustable Shelf (R)** Place the Adjustable Shelf Support Pins (R) into the desired pre-drilled holes on the inside of Center Panel (B) and Leg w/ 4 holes (D). Place Adjustable Shelf (H) onto the Adjustable Shelf Support Pins (R). See Illustration # 3.

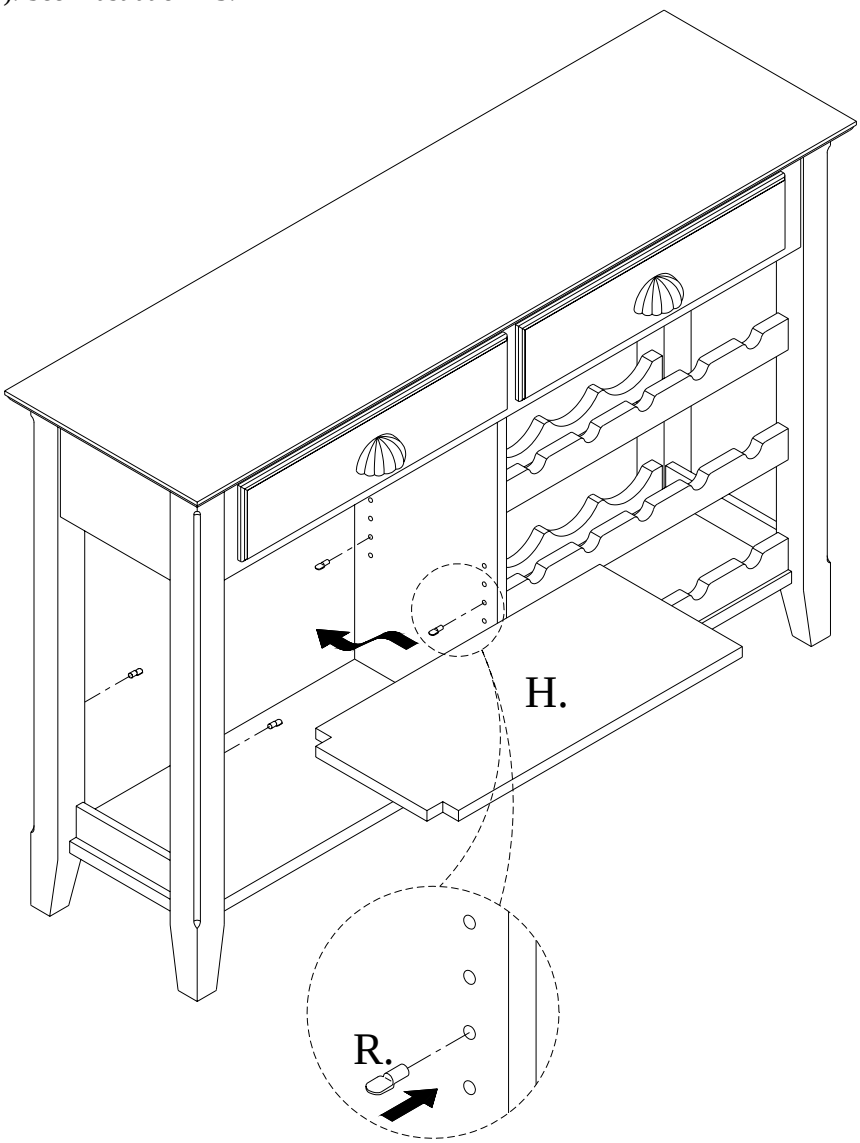

Illustration # 3